FENIX RACING MISTRAL

Driver :
Date :
Event :
Track :

Temp :
Condition :

Surface :

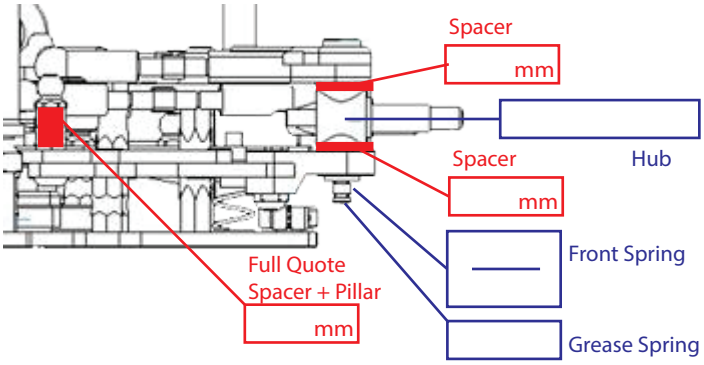

Shock Absorber:

Piston:_____
Oil:_____
Spring:_____

Lenght:_____ mm

Roll Damper:

Oil / Grease

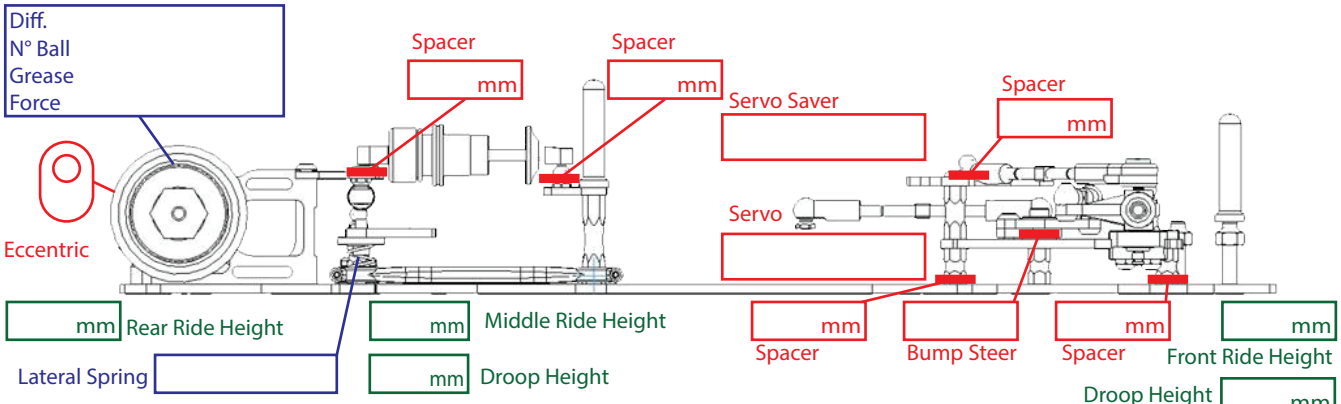

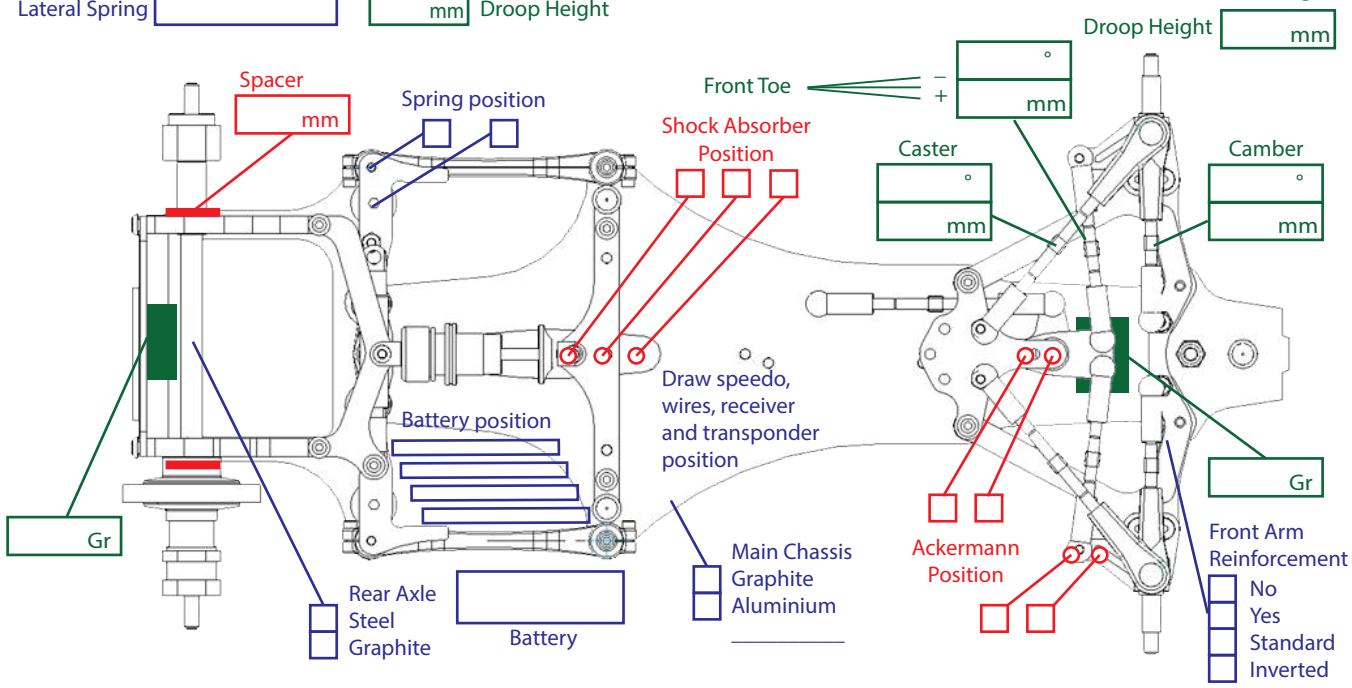

Motor Spur Gear Pinion Gear Gear Ratio Body Front Wing Rear Wing Weight	Front Tire Wheels Inserts Traitment Rear Tire Wheels Inserts Traitment	Esc set up Radio Th EPA Brake EPA Steering EPA